Wind.	Conductor type	N. of windings	Rotat	output pin	Winding Layer	N. of Layer	Tube			Notes
							Color	Ref.	Length mm	
N1	Litz 120x0.10 Ref. 4	0 9	+	7+8+9 10+11	9	1	/ Red	/ 6	/ 20	Perpendicular crossing on tape ref.5
Insulation: 2 turns polyester tape Ref.5										

Bill of materials

Ref.	Description
1	Coil Former RM12 12pins (B65816-C1512-T1 Epcos mat.Valox420 E45329)
2	Ferrite core RM12 gap 1.1mm (B65815-R87 Epcos)
3	RM12 clamp (B65816-A2002 Epcos)
4	Litz wire 120x0.100mm G1 (155°C E125660 or equivalent)
5	Polyester adhesive tape H=16mm thickness 0.06mm (P31 E178430 or equivalent)
6	Tube glass/silicone Ø1.5mm 4KV 20mm (GVES2500 E311983 or equivalent)
7	Activator for epoxy resin (IN1005 or equivalent)
8	Epoxy resin (36T or equivalent)
9	PVC label 24x12mm
10	Insulating varnish classH (AC43 E317427 or equivalent)
11	Polyestere label 4.7x14mm (7816 MH16411 or equivalent)

Winding rotation

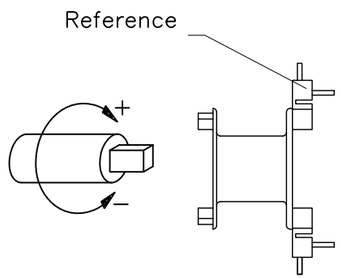

Bottom View

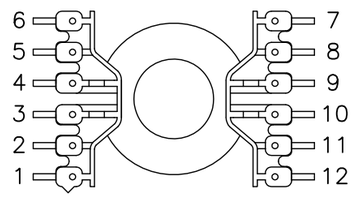

Electrical drawing

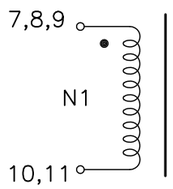

Assembling

* Serial number

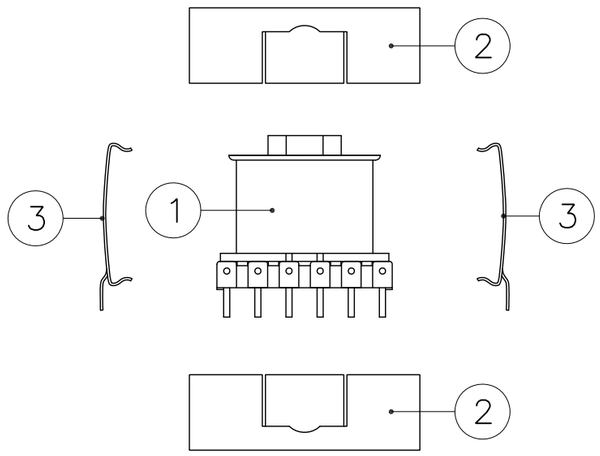

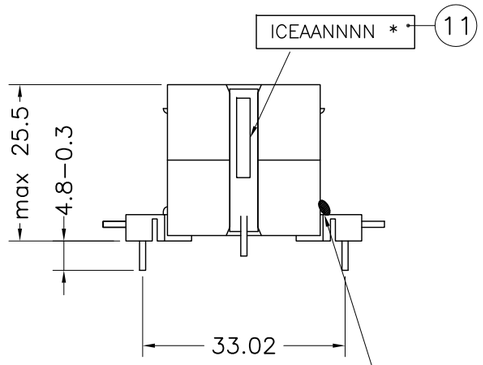

Fix core/coilformer with ref. 7+8



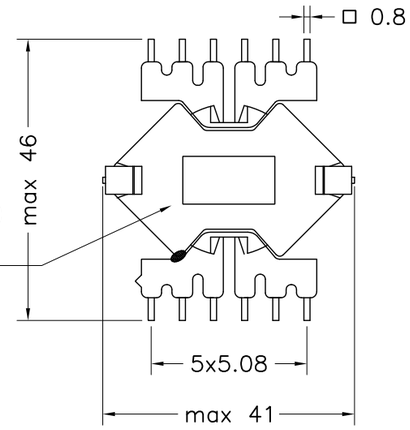

Varnish with ref.10

Dimensions in millimeter

RoHS compliant

N°.	Test type	Electrical test: Test conditions	Limits
1	Inductance	7+8+9-10+11 @ 10 kHz - 100 mV	from 11.9 to 16.1 µH

REV	Appr. date	Ref. Mod.	Modification description	Editing	Checked and Approved
02	21.07.15		Inserted new label	C. Picciani	D. Di Giorgio
01	23.01.14		Release	C. Picciani	D. Di Giorgio

I.C.E. TRANSFORMERS

Mod. AQ 05.09

DESCRIPTION: **Inductance RM12 LLC resonant choke (130521)**

DOCUMENT TYPE	CODE	REVISION	EMISSION DATE	PAGE
P.F.	8017.0901.012	02	23.01.14	1 of 1